Transfer or duplication of this document as well as the utilization or communication of its contents are prohibited unless explicit authorization is granted. Violations will be liable for compensation. All rights reserved for patent, utility model or designs registrations. 除非经予明确授权，否则禁止转让、复制、利用、交流本文件的内容，侵犯者将负赔偿责任。本公司保留对涉及发明、实用新型和外观专利的所有权利。

未注公差/General tolerances(mm)														
0 ~ 3	>3 ~ 6	>6 ~ 10	>10 ~ 18	>18 ~ 30	>30 ~ 50	>50 ~ 80	>80 ~ 120	>120 ~ 180	>180 ~ 250	>250 ~ 315	>315 ~ 400	>400 ~ 500	>500	0.1/10
±0.12	±0.18	±0.22	±0.26	±0.31	±0.37	±0.57	±0.80	±0.93	±1.05	±1.15	±1.60	±2.20	±2.50	±2°

PCB LAYOUT

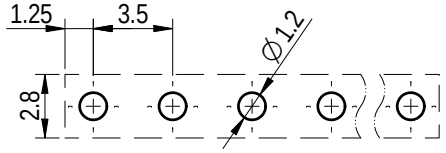

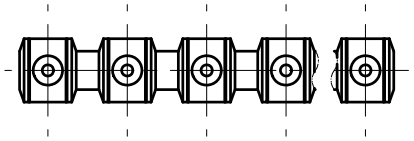

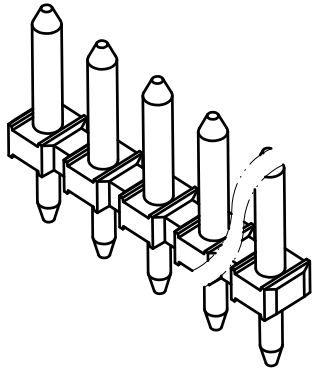

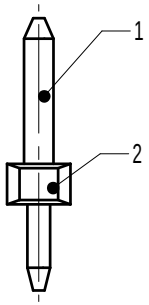

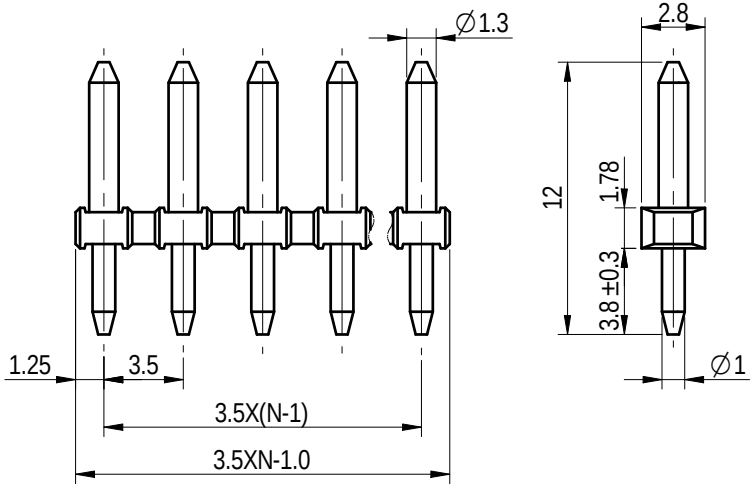

Note:
The A&Z(H) in the name means: A(H) and Z(H).

ITEM	NAME OF PART	MATERIAL	NOTES
2	Housing	PA66	UL94V-0
1	Pin header	Copper alloy	Sn plated

UL 标准/UL Standard:	B	C	D
额定电压/电流/Rated Voltage(V)/Current(A)	300/8	/	300/8
IEC 标准/IEC Standard:			
过压类别/Overvoltage Category/污染等级/Pollution Degree	III/3	III/2	II/2
额定电压/电流/Rated Voltage(V)/Current(A)	/	250/10	/
工频耐压/Withstanding voltage(V/1Min)	AC2000		
间距/Pitch(mm)/线数范围/Poles	3.5/N=01～24P		
使用温度范围/Operating temperature(°C)	-40～+105		
符合RoHS环保要求/Conform to RoHS	Yes		

DEGSON

APPD:	兰春华	2022.11.25
CHKD:	陈招	2022.11.25
DRFT:	龚徐涛	2022.11.24

A4 mm (inch)

MATERIAL: SURFACE/COLOR:
MAT NO./REV: / 00 MAT STATUS: 批量

NAME
DG333J-3.5-XXP-1Y-00A&Z(H)

DRAWING NO.	TYPE	DRAWING STATUS	SCALE	SHEET
200029305	CUSTOMER DRAWING	已发布	3:1	1/1

REV	ECN	DESCRIPTION	DRFT	DATE
00			龚徐涛	2022.11.24